Using MMDS Surplus Amplifiers For 2304

MMDS Amplifiers re-tuned to 2034
And
Control Circuit Ideas

Gary
WA2OMY

Two Types of Surplus MMDS Transmitters

ITS Transmitter



EMCEE Transmitter
Exciter



ITS TRANSMITTERS

- ITS Transmitter driver - spare 12 W amplifier
- Used in Feedforward amp design, not needed for xmit amp after conversion.
- Requires:

  -5V Bias @ 130 mA

  10V Drain Supply @ 5.2 A

  (12V w/ 2 diode drop)

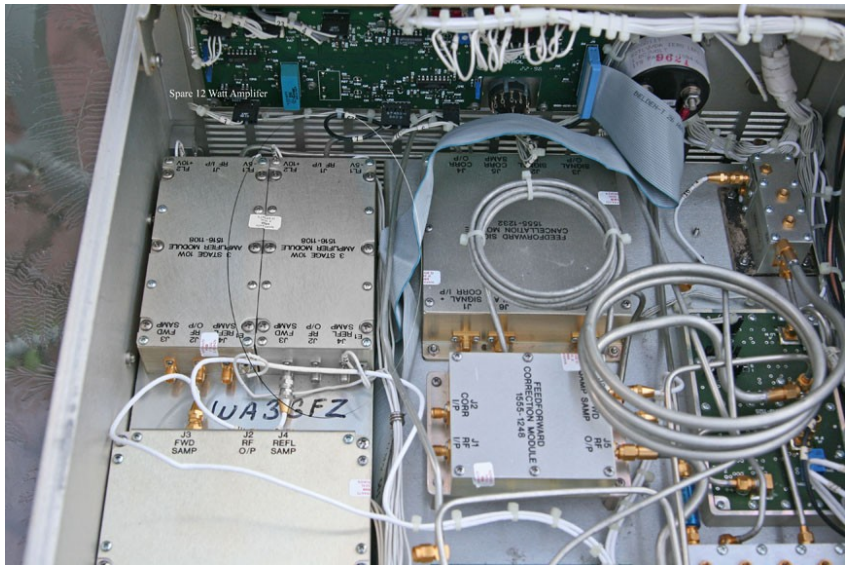

EMCEE Transmitters



Driver amplifier- 2 stages

4 amps in ea. chassis

- 2- driver
- 2- 10 W stage
- 2 Complete amplifiers if 2 stages used.
- Requires -

-15 V Bias w/ on-board
-5 V zener

+12V w/ on-board series resistor for drain supply of 10V.

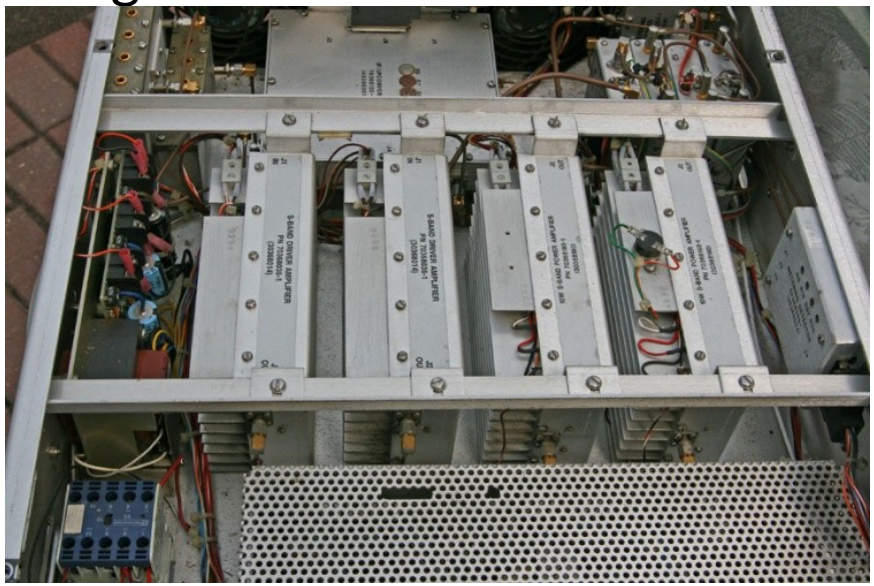

EMCEE Amplifiers Retuned 2304

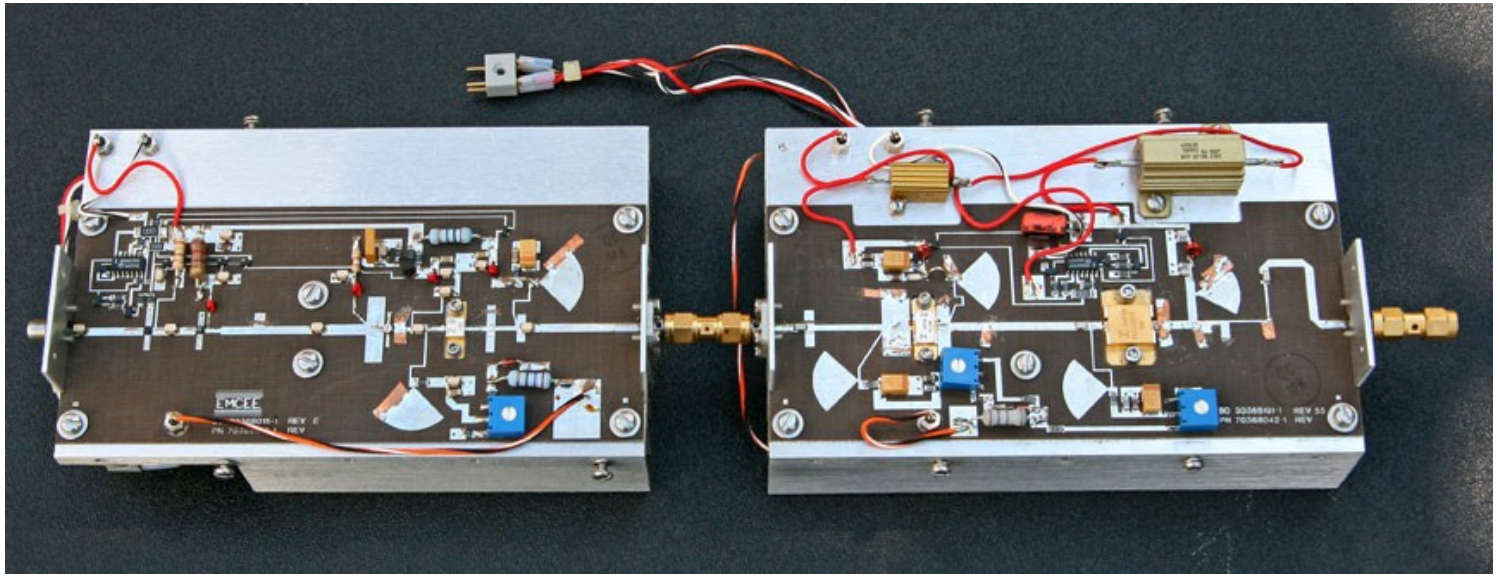

Enough gain for 11 W from mixer-filter

- 1st 2 stages of driver MMIC design.
- Remove one for less gain

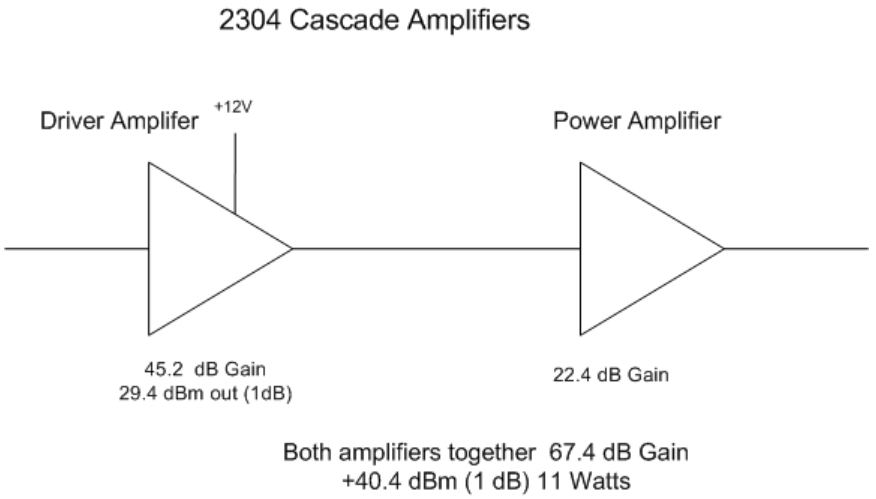

All Amplifiers based on Fujitsu FLL200 -3 GaAs FET

FLL200IB-1, FLL200IB-2, FLL200IB-3

L-Band Medium & High Power GaAs FET

FEATURES

- High Output Power: P_{1dB} = 42.5dBm (Typ.)
- High Gain: G_{1dB} = 13.0dB (Typ.)@1.8GHz (FLL200IB-1)
- High PAE: η_{add} = 34% (Typ.)
- Proven Reliability
- Hermetically Sealed Package

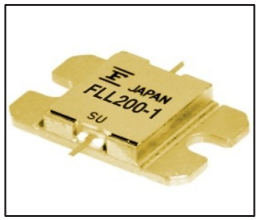

DESCRIPTION

The FLL200IB-1, FLL200IB-2, FLL200IB-3 are Power GaAs FETs that are specifically designed to provide high power at L-Band frequencies with gain, linearity and efficiency superior to that of silicon devices. The performance in multitone environments for Class AB operation make them ideally suited for base station applications.

Fujitsu's stringent Quality Assurance Program assures the highest reliability and consistent performance.

ABSOLUTE MAXIMUM RATING (Ambient Temperature Ta=25°C)

Item	Symbol	Condition	Rating	Unit
Drain-Source Voltage	V_{DS}		15	V
Gate-Source Voltage	V_{GS}		-5	V
Total Power Dissipation	P_T	T_C = 25°C	83.3	W
Storage Temperature	T_{stg}		-65 to +175	°C
Channel Temperature	T_{ch}		175	°C

Fujitsu recommends the following conditions for the reliable operation of GaAs FETs:

1. The drain-source operating voltage (V_{DS}) should not exceed 10 volts.
2. The forward and reverse gate currents should not exceed 53.6 and -11.6 mA respectively with gate resistance of 25Ω.
3. The operating channel temperature (T_{ch}) should not exceed 145°C.

ELECTRICAL CHARACTERISTICS (Ambient Temperature Ta=25°C)

Item		Symbol	Test Conditions		Limit Min.	Limit Typ.	Limit Max.	Unit
Saturated Drain Current		I_{DSS}	V_{DS} = 5V, V_{GS} = 0V		-	8	12	A
Transconductance		g_m	V_{DS} = 5V, I_{DS} = 4800mA		-	4000	-	mS
Pinch-off Voltage		V_p	V_{DS} = 5V, I_{DS} = 480mA		-1.0	-2.0	-3.5	V
Gate Source Breakdown Voltage		V_{GSO}	I_{GS} = -480μA		-5	-	-	V
Output Power at 1dB G.C.P.	FLL200IB-1	P_{1dB}	V_{DS} = 10V, I_{DS} = 0.6 I_{DSS} (Typ.)	f=1.5GHz	41.5	42.5	-	dBm
	FLL200IB-2			f=2.3GHz				
	FLL200IB-3			f=2.6GHz				
Power Gain at 1dB G.C.P.	FLL200IB-1	G_{1dB}		f=1.5GHz	12.0	13.0	-	dB
	FLL200IB-2			f=2.3GHz	10.0	11.0	-	dB
	FLL200IB-3			f=2.6GHz	10.0	11.0	-	dB
Drain Current		I_{dsr}	V_{DS} = 10V, I_{DS} = 0.6 I_{DSS} (Typ.)		-	4.8	6.0	A
Power added Efficiency		η_{add}			-	34	-	%
Thermal Resistance		R_{th}	Channel to Case		-	1.6	1.8	°C/W
Channel Temperature Rise		ΔT_{ch}	10V x I_{dsr} x R_{th}		-	-	80	°C

CASE STYLE: IB

G.C.P.: Gain Compression Point

FUJITSU

Edition 1.1
July 1999

2304 Amplifiers

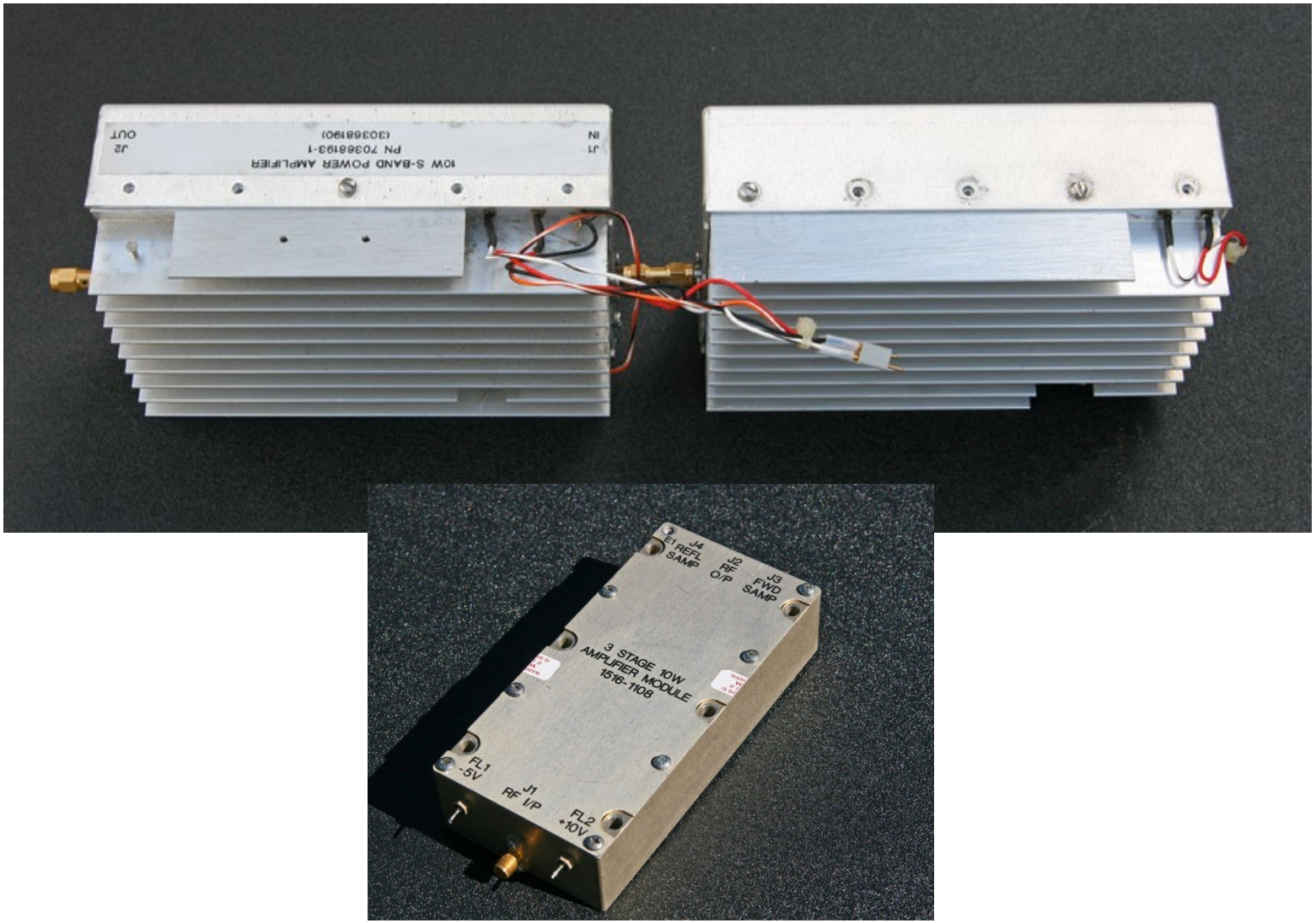

What do we need for easy amateur use?

- Built in -5 V supply
- TR Switch control
- Bias protection
- Drain Current monitor (Nice to have)

Negative Bias supply

Linear Tech - LT1931 Inverting DC-DC converter
Low noise- Low ripple – 1 MHz switching Frequency
Easy to use

Linear Tech suggested application schematic. (Just what we need)

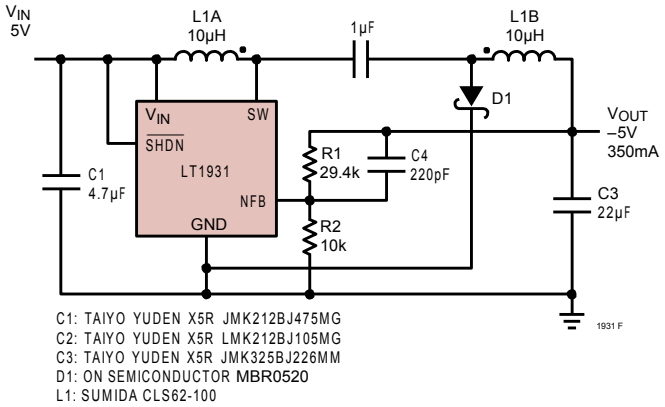

Figure 1. 5V to –5V, 350mA Inverting DC/DC Converter

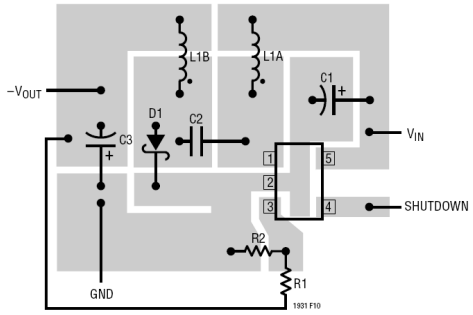

Figure 10. Suggested Component Placement.

1st – Breadboard of – V switching supply

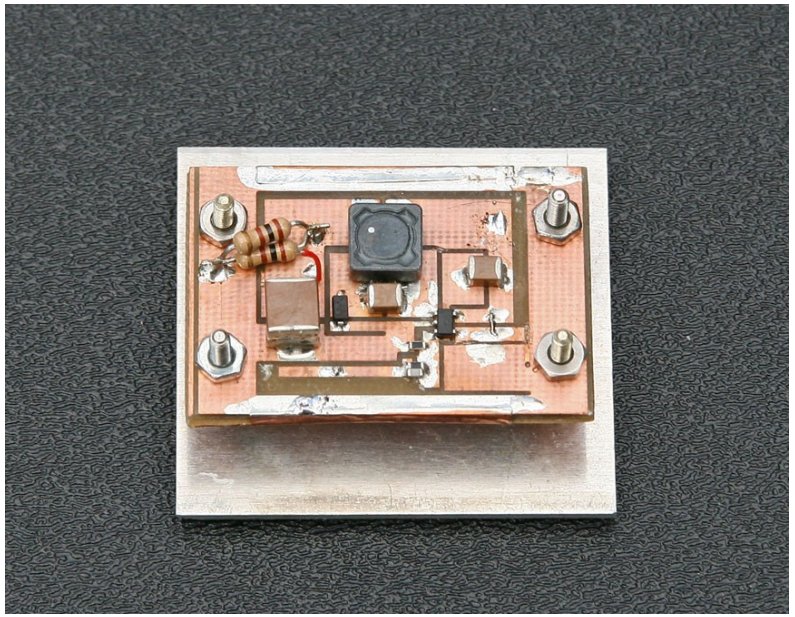

TR Control

- W6PQL – High Current DC Fet Switch

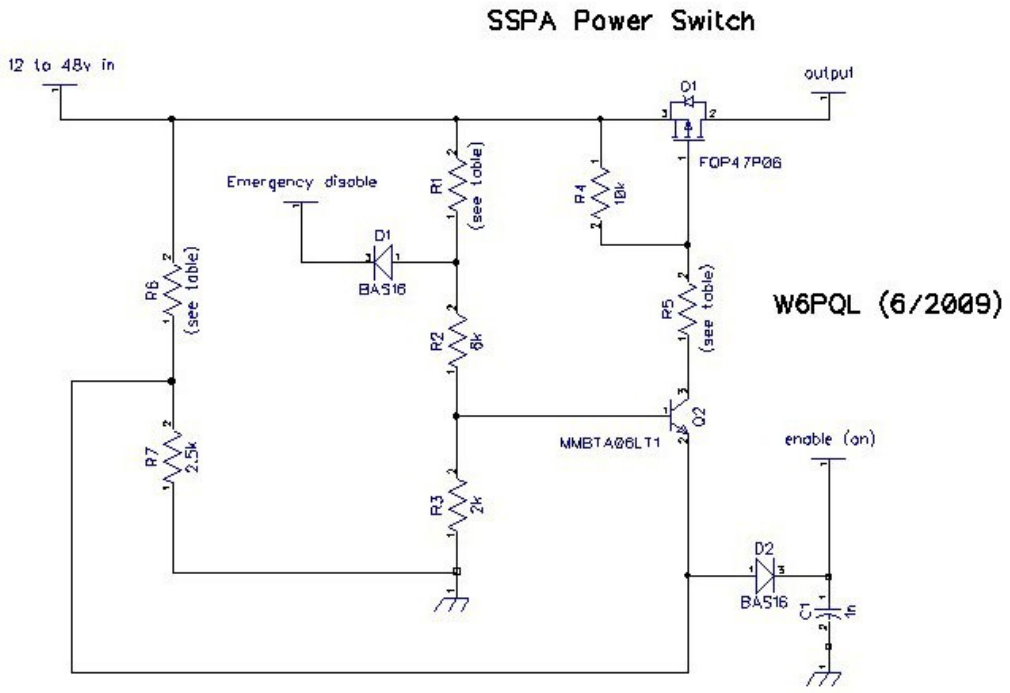

Bias Protection

- Modify W6PQL FET Switch
  - Add FET for bias protection

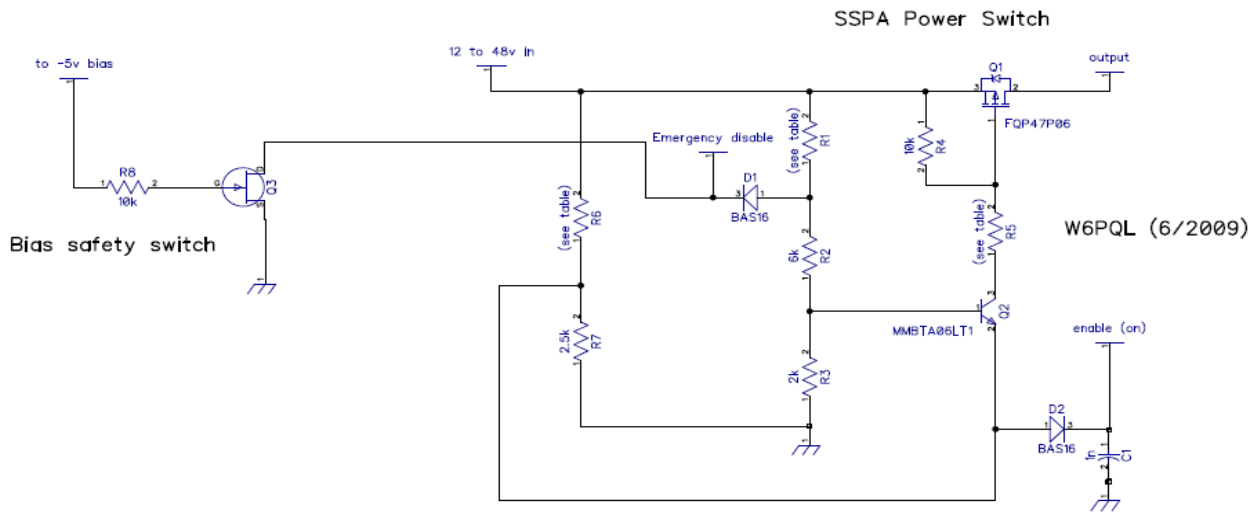

Operating Voltage	R1	R5	R6
13.8v	1k	500 Ohms	8k
28v	10k	3.3k	20k
48v	22k	6k	33k

Final Prototype Circuit to control FET amplifiers

-5V Supply, W6PQL FET SW, Drain Current monitor

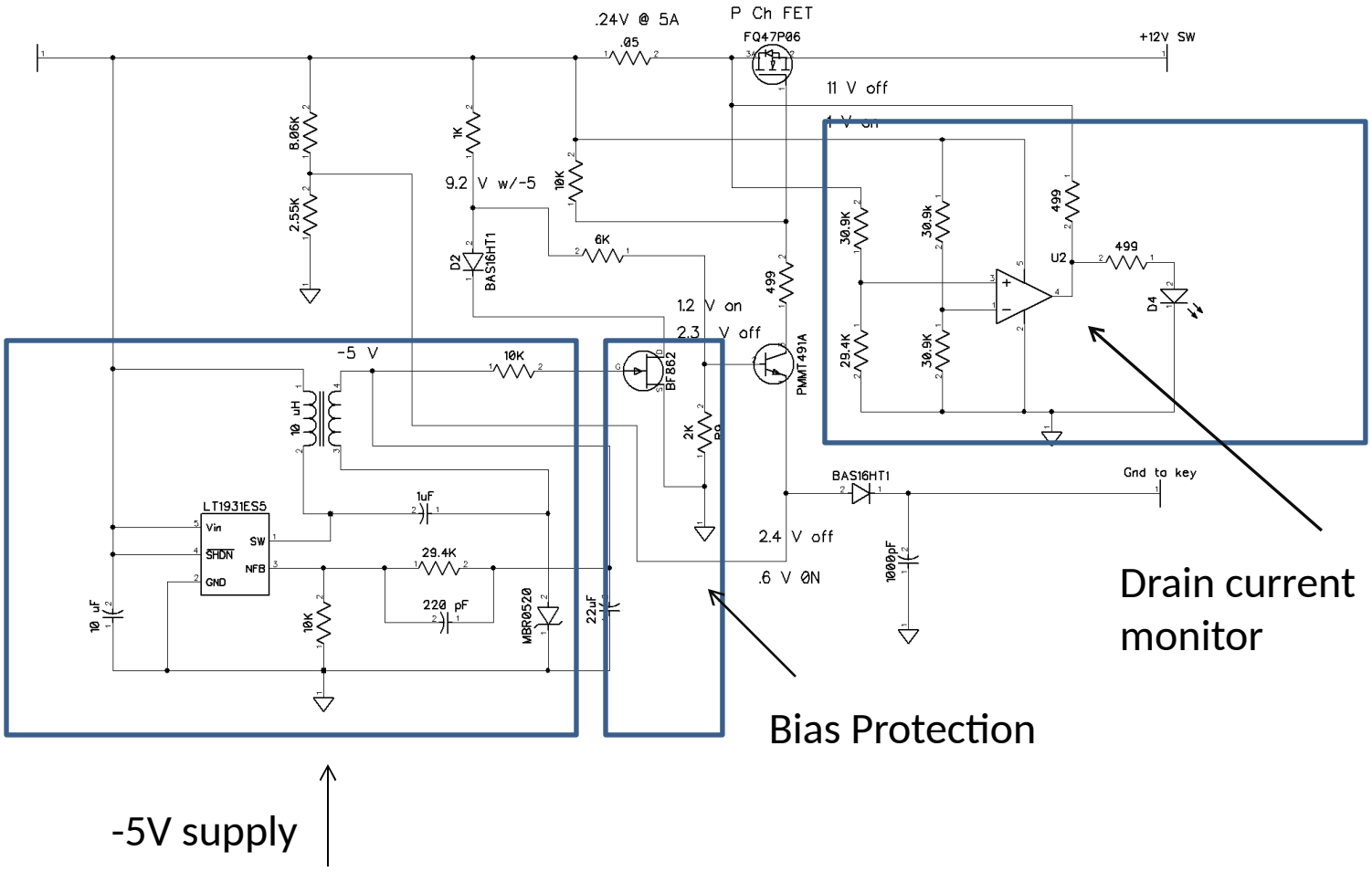

- Prototype of complete 14W amplifier from ITS Chassis
- 12 V IN
- Gnd to turn on amplifier (Pushbutton- for test)

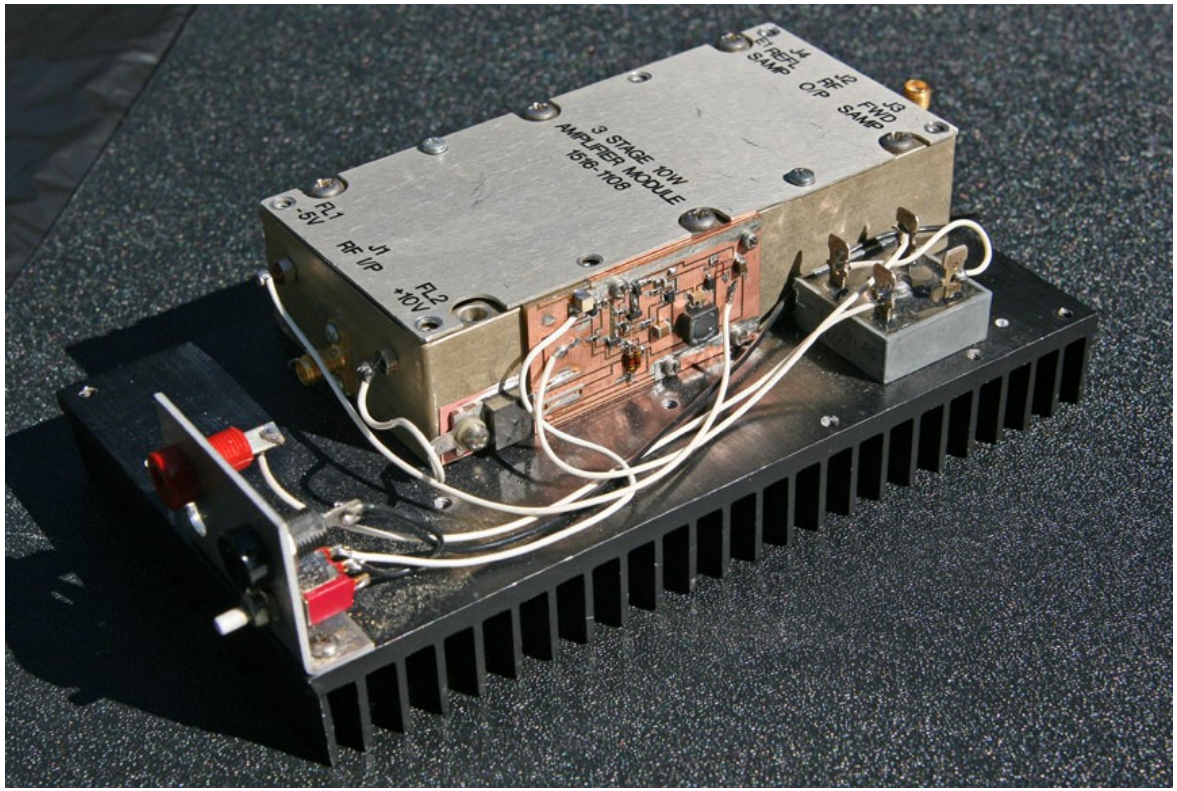

PCB 123 Boards

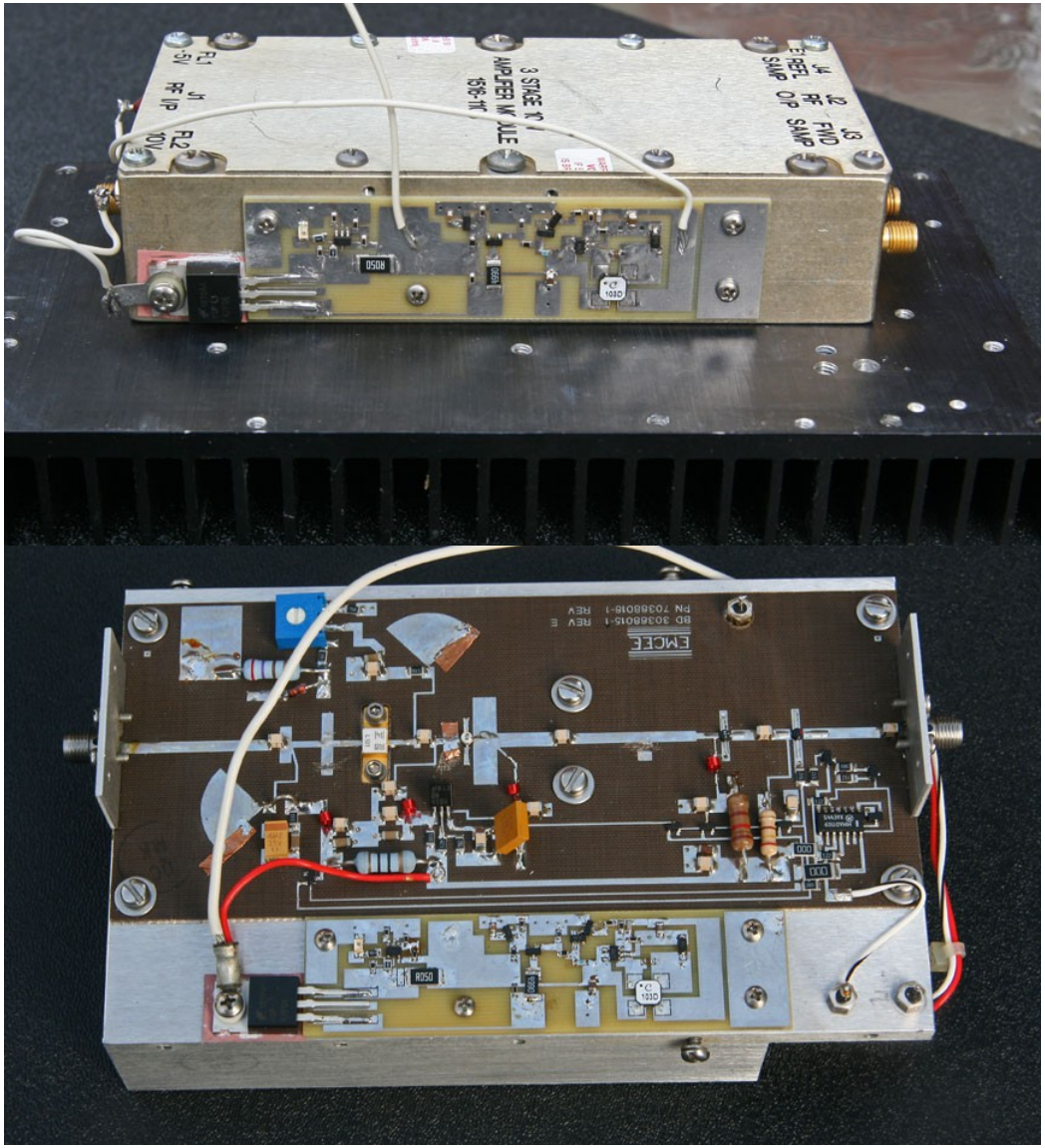

PWB in Sunstone Circuits

- Schematic and PL in PCB123
  - (Sunstone Circuits)
- Amplifiers available
- Boards – kits available- depending on interest

Next steps

- Make controller for high power stages
- ITS Transmitters 50W

- EMCEE transmitters 2- 30 W amplifiers.